Single point load cell
Up to 30 kg
Model F4881

Applications

- Multihead combination weighers
- Belt weighers, floor and bench scales
- Filling applications
- Dosing systems

Special features

- Measuring ranges 0 ... 2 kg to 0 ... 30 kg [0 ... 4 lbs to 0 ... 66 lbs]
- Load cell made from aluminium
- High accuracy, react quickly, low settling time
- Insensitive to lateral and corner load
- Simple design, easy installation

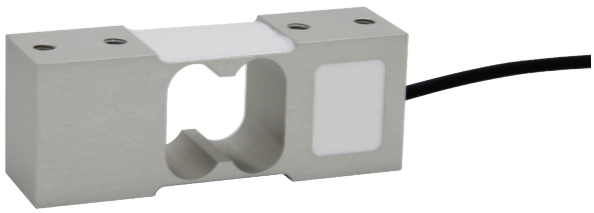

Load cell, model F4881

Description

The model F4881 single point load cells are a range of aluminium single point load cells suitable for a wide range of applications. Thanks to their standardised geometry and simple design, they can be easily installed in all types of scales.

The model F4881 load cells are adapted to the special requirements of multihead combination weighers and feature a particularly short settling time, so that the weight of the goods being combined can be determined as quickly as possible.

The load cells are also suitable for use in sectors such as industry, commerce, medicine and research.

The model F4881 single point load cells also feature high accuracy and react quickly. They are also insensitive to lateral and corner loading.

The load cells are easy to handle due to their simple force introduction. This is made perpendicular to the geometry.

Data sheets showing similar products:

Single point load cell up to 40 kg; model F4882; see data sheet FO 53.17
Single point load cell up to 300 kg; model F4883; see data sheet FO 53.18
Single point load cell up to 635 kg; model F4884; see data sheet FO 53.19
Single point load cell up to 200 kg; model F4885; see data sheet FO 53.20

Specifications per VDI/VDE/DKD 2638

Model F4881						
Rated load F_{nom} kg	2	3	5	8	15	30
Rated load F_{nom} lbs	4	7	11	18	33	66
Relative linearity error din_{lin} 1)	±0.02 % F_{nom}					
Relative creep, 30 min.	±0.02 % F_{nom}					
Relative reversibility error v	±0.02 % F_{nom}					
Relative deviation of zero signal $d_{S,0}$	±5 % F_{nom}					
Temperature effect on zero signal TK_0	≤ ±0.014 % / 10 K					
Temperature effect on characteristic value TK_C	≤ ±0.02 % / 10 K					
Force limit F_L	150 % F_{nom}					
Breaking force F_B	200 % F_{nom}					
Material of the measuring body	Aluminium					
Rated temperature range $B_{T;\,nom}$	-10 ... +40 °C [14 ... 104 °F]					
Operating temperature range $B_{T,\,G}$	-20 ... +65 °C [-4 ... 149 °F]					
Input resistance R_e	410 ±10 Ω					
Output resistance R_a	350 ±5 Ω					
Insulation resistance R_{is}	≥ 5,000 MΩ/DC 100 V					
Output signal (rated characteristic value) C_{nom}	2.0 ±0.2 mV/V					
Electrical connection						
Design A: 2 kg; 3 kg; 5 kg; 8 kg [4.4 lbs; 6.6 lbs; 11 lbs; 17.6 lbs]	Measuring cable Ø 3 x 250 mm [Ø 0.13 x 9.84 in]					
Design B: 5 kg; 8 kg [11 lbs; 17.6 lbs]	Measuring cable Ø 3 x 360 mm [Ø 0.13 x 14.17 in]					
Design B: 30 kg [66 lbs]	Measuring cable Ø 3 x 2,000 mm [Ø 0.13 x 78.74 in]					
Design C: 15 kg [33 lbs]	Measuring cable Ø 3 x 250 mm [Ø 0.13 x 9.84 in]					
Design C: 30 kg [66 lbs]	Measuring cable Ø 3 x 250 mm [Ø 0.13 x 9.84 in]					
Supply voltage U_B, nom	DC 5 ... 10 V (max. 15 V)					
Ingress protection (per IEC/EN 60529)	IP67					
Platform size	Design A: 300 x 300 mm [11.81 x 11.81 in]					
	Design B: 350 x 350 mm [13.78 x 13.78 in]					
	Design C: 300 x 300 mm [11.81 x 11.81 in]					
Weight	0.2 kg [0.44 lbs]					

1) Relative linearity error is specified in accordance with guideline VDI/VDE/DKD 2638 chap. 3.2.6.

Approvals

Logo	Description	Region
CE	**EU declaration of conformity** RoHS directive	European Union
UK CA	**UKCA** RoHS directive	United Kingdom

Optional approvals

Logo	Description	Region
EAC	**EAC**	Eurasian Economic Community

Dimensions in mm [in]

Model F4881 of variant A

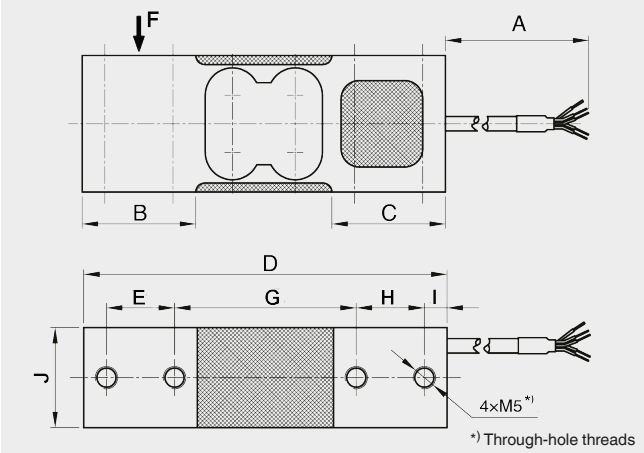

Dimensions in mm								
A	B	C	D	E	G	H	I	J
250	25	25	80	15	40	15	5	22

Dimensions in inch								
A	B	C	D	E	G	H	I	J
9.84	0.98	0.98	3.15	0.59	1.58	0.59	0.20	0.87

Model F4881 of variant B

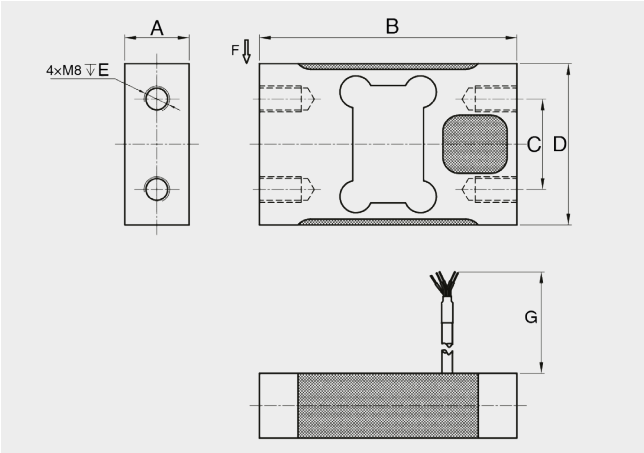

Rated load in kg	Dimensions in mm					
	A	B	C	D	E	G
5	20	80	28	50	13	13
8	20	80	28	50	13	360
30	20	80	28	50	13	2,000

Rated load in lbs	Dimensions in inch					
	A	B	C	D	E	G
11.02	0.79	3.15	1.10	1.97	0.51	0.51
17.64	0.79	3.15	1.10	1.97	0.51	14.17
66	0.79	3.15	1.10	1.97	0.51	78.74

Model F4881 of variant C

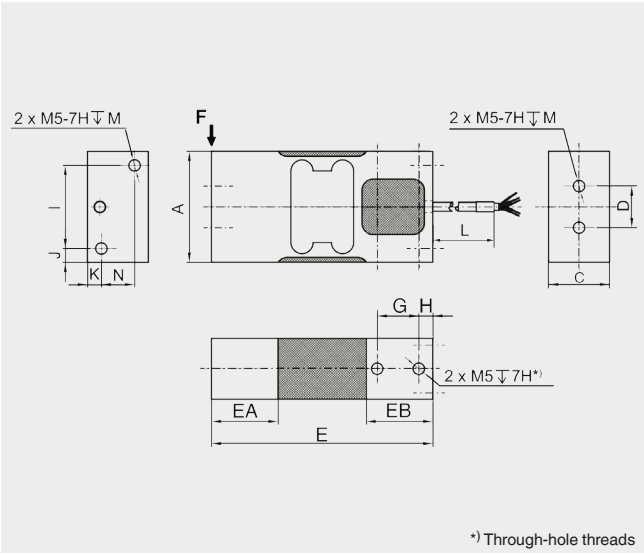

Dimensions in mm						
A	C	D	E	EA	EB	G
40	22	15	80	24	24	15

Dimensions in mm						
H	I	J	K	L	M	N
5	30	5	5	250	15	12

Dimensions in inch						
A	C	D	E	EA	EB	G
1.57	0.87	0.59	3.15	0.95	0.95	0.59

Dimensions in inch						
H	I	J	K	L	M	N
0.20	1.18	0.20	0.20	9.84	0.59	0.47

Pin assignment

Electrical connection		
Supply voltage+	Exc+	Red
Supply voltage-	Exc-	Green
Signal+	Sig+	Black
Signal-	Sig-	White
Shield ⏚	Shield	Yellow-green

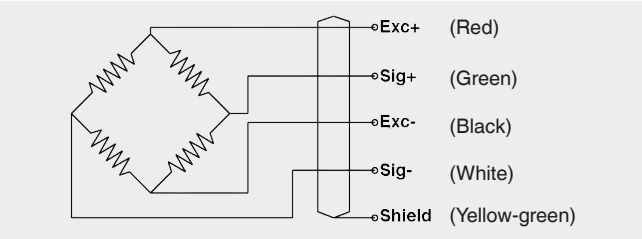

WIKA Alexander Wiegand SE & Co. KG
Alexander-Wiegand-Straße 30
63911 Klingenberg/Germany
Tel. +49 9372 132-0
info@wika.de
www.wika.com